Series 10-ZSE80/10-ISE80

2-Color Display
Digital Pressure Switch For General Fluids

How to Order

Clean series

Rated pressure range

80	–0.1 to 1 MPa
80H	–0.1 to 2 MPa

Made to Order
Refer to Table 1 below.

For positive pressure 10- ISE 80 - 02 □ - N - M □ □ - □

For vacuum/ compound pressure 10- ZSE 80 - 02 □ - N - M □ □ - □

Rated pressure range

80	0 to –101 kPa
80F	–100 to 100 kPa

Piping

02	R1/4 (M5 female thread)
N02	NPT1/4 (M5 female thread)
F02*	G1/4 (M5 female thread)
C01	Rc1/8
A2	URJ1/4
B2	TSJ1/4

* Piping direction "L" (bottom ported) is not available.

Piping direction

Nil	Rear ported
L*	Bottom ported

* Piping specification "F2" (G 1/4) is not available.

Input/Output

N	NPN open collector 1 output
P	PNP open collector 1 output
A	NPN open collector 2 outputs
B	PNP open collector 2 outputs
R	NPN open collector 2 outputs + Analog voltage output/Auto-shift switching
T	PNP open collector 2 outputs + Analog voltage output/Auto-shift switching
S	NPN open collector 2 outputs + Analog current output/Auto-shift switching
V	PNP open collector 2 outputs + Analog current output/Auto-shift switching

Option 3

Symbol	Operating manual Note)	Calibration certificate
Nil	● (Booklet)	—
Y	—	—
K	● (Booklet)	●
T	—	●

Note) All texts in both English and Japanese

Option 1

Nil	With unit switching function Note 1)
M	Fixed SI unit Note 2)
P	Initial value psi

Note 1) Under the New Measurement Law, sales of switches with the unit switching function are not allowed for use in Japan.
Note 2) Fixed unit 10-ISE80H : MPa
Others : MPa, kPa

Option 2

Nil	None
A	With bracket 10-ZS-24-A (Rear ported) 10-ZS-35-A (Bottom ported)
B	With bracket Note) 10-ZS-24-D
C	Panel mount 10-ZS-35-C 10-ZS-35-B Rear ported / Bottom ported
D	Panel mount + Front protection cover 10-ZS-35-F 10-ZS-35-E Rear ported / Bottom ported

Note) Rear ported only

Made to Order

Table 1 Made to Order

Symbol	Specifications
-X501	Lead wire length 3 m

Note) Refer to page 1351 for detail.

Option

Option	Piping direction	Part no.
Bracket	Rear ported	10-ZS-24-A
	Rear ported	10-ZS-24-D
	Bottom ported	10-ZS-35-A
Panel mount	Rear ported	10-ZS-35-C
	Bottom ported	10-ZS-35-B
Panel mount + Front protection cover	Rear ported	10-ZS-35-F
	Bottom ported	10-ZS-35-E

⚠Caution

This product is the 10-ZSE80/ISE80 series blown with air and double packed in a Class M3.5 (ISO Class 5) clean room.

Specifications

Refer to the SMC website for Pressure Switches Precautions (M-E03-3) and Specific Product Precautions (Operation Manual).

Model			10-ZSE80 (Vacuum pressure)	10-ZSE80F (Compound pressure)	10-ISE80 (Positive pressure)	10-ISE80H (Positive pressure)
Rated pressure range			0.0 to –101.0 kPa	–100.0 to 100.0 kPa	–0.100 to 1.000 MPa	–0.100 to 2.00 MPa
Display/Set pressure range			10.0 to –111.1 kPa	–110.0 to 110.0 kPa	–0.105 to 1.100 MPa	–0.105 to 2.20 MPa
Withstand pressure			500 kPa		2 MPa	4 MPa
Wetted parts material			Pressure sensor: Stainless steel 630, Fitting: Stainless steel 304			
Display/Smallest settable increment			0.1 kPa	0.1 kPa	0.001 MPa	0.001 MPa (to 1.999) 0.01 MPa (2.00 to)
Applicable fluid			Fluids do not corrode stainless steel 630 and 304			
Power supply voltage			12 to 24 VDC ±10%, Ripple (p-p) 10% or less (with power supply polarity protection)			
Current consumption			45 mA or less			
Switch output			NPN 1 output, NPN 2 outputs, PNP 1 output, PNP 2 outputs			
	Maximum load current		80 mA			
	Maximum load voltage		28 V (at NPN output)			
	Residual voltage		1 V or less (with load current of 80 mA)			
	Response time		2.5 ms (with anti-chattering function: 20, 100, 500, 1000, 2000 ms)			
	Short circuit protection		Yes			
Repeatability			±0.2% F.S. ±1 digit			
Hysteresis	**Hysteresis mode**		Variable (0 or above)			
	Window comparator mode					
Analog output	**Voltage output**	**Output voltage (Rated pressure range)**	1 to 5 V ±2.5% F.S.		0.6 to 5 V ±2.5% F.S.	0.8 to 5 V ±2.5% F.S.
		Linearity	±1% F.S. or less			
		Output impedance	Approx. 1 kΩ			
	Current output	**Output current (Rated pressure range)**	4 to 20 mA ±2.5% F.S.		2.4 to 20 mA ±2.5% F.S.	3.2 to 20 mA ±2.5% F.S.
		Linearity	±1% F.S. or less			
		Load impedance	Maximum load impedance: 300 Ω (Power supply voltage 12 V) 600 Ω (Power supply voltage 24 V) Minimum load impedance: 50 Ω			
Auto-shift input			Non-voltage input (Reed or Solid state), Low level: 0.4 V or less, 5 ms or longer input			
Display			3 1/2-digit, 7-segment, 2-color LCD (Red/Green)			
Display accuracy			±2% F.S. ±1 digit (Ambient temperature of 25 ±3°C)			
Indicator light			Lights up when output is turned ON. OUT1, OUT2: Orange			
Environment resistance	**Enclosure**		IP65			
	Operating temperature range		Operating: 0 to 50°C, Stored: –10 to 60°C (No freezing or condensation)			
	Operating humidity range		Operating/Stored: 35 to 85% RH (No condensation)			
	Withstand voltage		250 VAC for 1 minute between live parts and case			
	Insulation resistance		2 MΩ or more between live parts and case (at 50 VDC Mega)			
Temperature characteristics			±3% F.S. (Based on 25°C, within operating temperature range)			
Lead wire			Oilproof heavy-duty vinyl cable, 3 cores (N.P) ø3.5, 2 m 4 cores (A.B) Conductor area: 0.15 mm² (AWG26) 5 cores (R.T.S.V) Insulator O.D.: 0.95 mm			
Standards			CE UL/CSA (E216656) RoHS			
Cleanliness class (ISO class)			Class 4			

Piping Specifications

Model	02	N02	F02	C01	A2	B2
Port size	R1/4	NPT1/4	G1/4	Rc1/8	URJ1/4	TSJ1/4
Weight (Bottom ported)	117 g	118 g	—	114 g	120 g	111 g
Weight (Rear ported)	89 g	90 g	86 g	86 g	92 g	83 g
Leakage	1 x 10^{-5} Pa·m³/s				1 x 10^{-10} Pa·m³/s	

Set Pressure Range and Rated Pressure Range

Set the pressure within the rated pressure range.
The set pressure range is the range of pressure that is possible in setting.
The rated pressure range is the range of pressure that satisfies the specifications (accuracy, linearity, etc.) on the switch.
Although it is possible to set a value outside the rated pressure range, the specifications will not be guaranteed even if the value stays within the set pressure range.

Switch		Pressure range
For vacuum pressure	**10-ZSE80**	–101 kPa to 0; –111 kPa to 10 kPa
For compound pressure	**10-ZSE80F**	–100 kPa to 100 kPa; –110 kPa to 110 kPa
For positive pressure	**10-ISE80**	–0.1 MPa to 1 MPa; –0.105 MPa to 1.1 MPa
	10-ISE80H	–0.1 MPa to 2 MPa; –0.105 MPa to 2.2 MPa

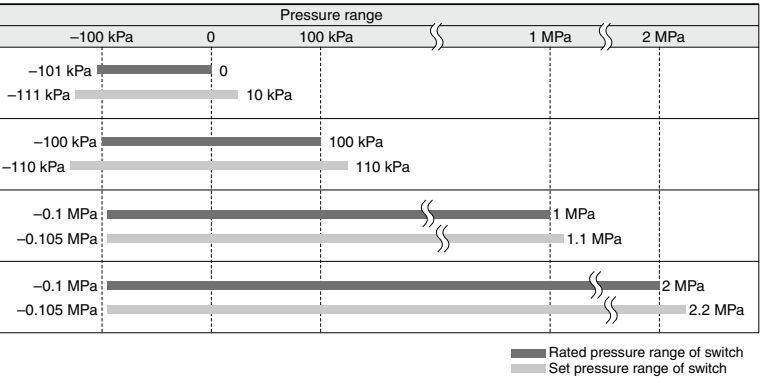

Analog Output

Voltage output

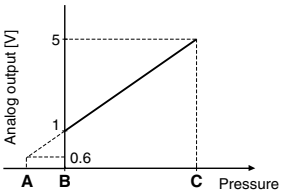

Current output

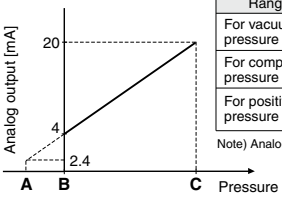

Range	Rated pressure range	A	B	C
For vacuum pressure	0.0 to –101.0 kPa	10.1 kPa	0	–101.0 kPa
For compound pressure	–100.0 to 100.0 kPa	—	–100.0 kPa	100.0 kPa
For positive pressure	–0.100 to 1.000 MPa	–0.100 MPa	0	1.000 MPa
	–0.100 to 2.00 MPa	–0.100 MPa Note)	0	2.00 MPa

Note) Analog output is 0.8 [V] or 3.2 [mA] at the pressure A.

Internal Circuit and Wiring Example

-N
NPN (1 outputs)

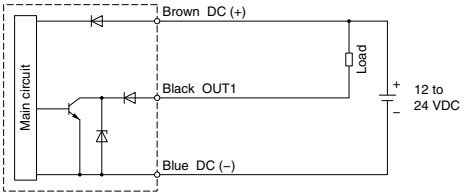

Max. 28 V, 80 mA
Residual voltage 1 V or less

-P
PNP (1 outputs)

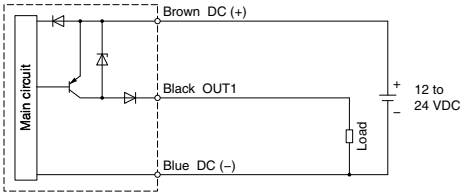

Max. 80 mA
Residual voltage 1 V or less

-A
NPN (2 outputs)

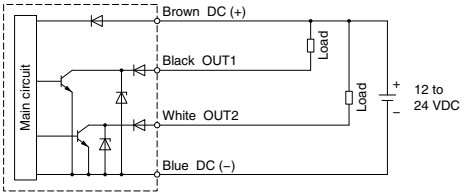

Max. 28 V, 80 mA
Residual voltage 1 V or less

-B
PNP (2 outputs)

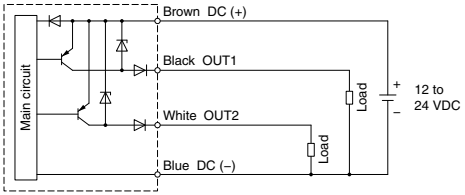

Max. 80 mA
Residual voltage 1 V or less

-R, -S
R: NPN (2 outputs) + Analog voltage output
S: NPN (2 outputs) + Analog current output

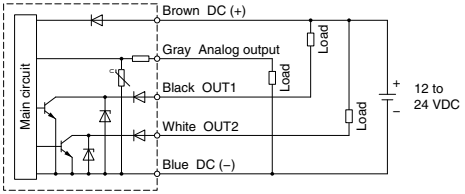

Max. 28 V, 80 mA
Residual voltage 1 V or less

-R/-S
NPN (2 outputs) + Auto-shift input

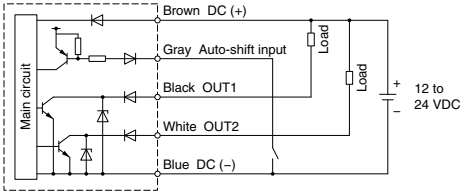

Max. 28 V, 80 mA
Residual voltage 1 V or less

-T, -V
T: PNP (2 outputs) + Analog voltage output
V: PNP (2 outputs) + Analog current output

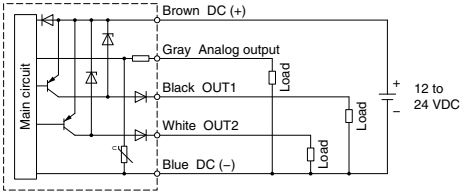

Max. 80 mA
Residual voltage 1 V or less

-T/-V
PNP (2 outputs) + Auto-shift input

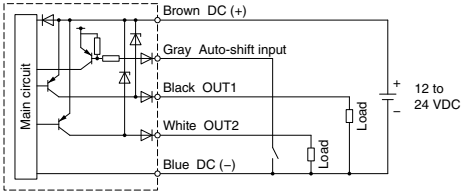

Max. 80 mA
Residual voltage 1 V or less

Dimensions (For details about lead wires, refer to the product specifications.)

10-ZSE80/10-ISE80- 02 N02 F02 C01 A2 B2

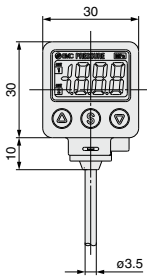

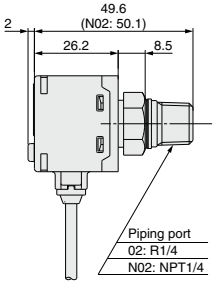

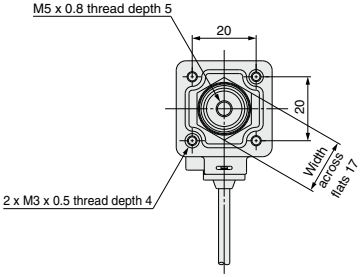

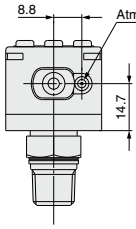

When the pressure switch is used in a place where water and dust splashes may occur, insert a tube into the atmospheric vent port, and route the other end of the tube to a safe place away from water and dust.

* SMC TU0425 (polyurethane, O.D. ø4, I.D. ø2.5) suits to the pressure switch.

Note) If it is predicted that the pressure, such as the water hammer or surge pressure fluctuates rapidly, refer to the Handling Precautions stated in the Operation Manual at SMC website (http://www.smcworld.com).

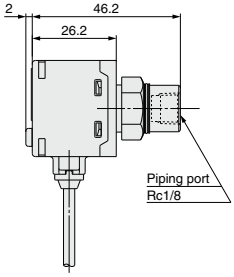

-C01: Rc1/8

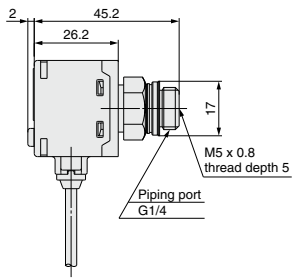

-F02: G1/4

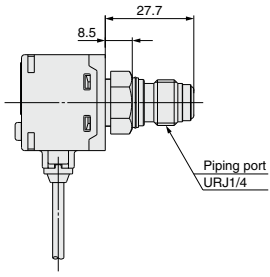

-A2: URJ1/4

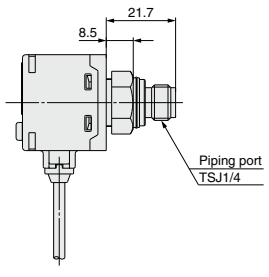

-B2: TSJ1/4

Dimensions (For details about lead wires, refer to the product specifications.)

10-ZSE80/10-ISE80- 02L / N02L / C01L / A2L / B2L

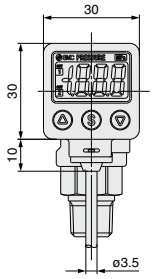

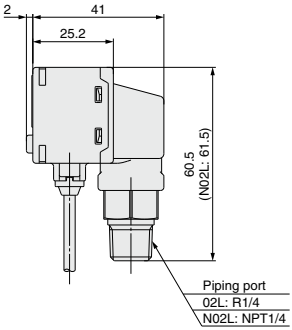

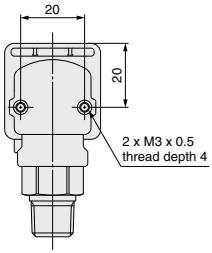

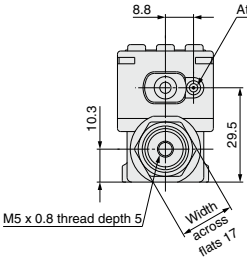

When the pressure switch is used in a place where water and dust splashes may occur, insert a tube into the atmospheric vent port, and route the other end of the tube to a safe place away from water and dust.

* SMC TU0425 (polyurethane, O.D. ø4, I.D. ø2.5) suits to the pressure switch.

Note) If it is predicted that the pressure, such as the water hammer or surge pressure fluctuates rapidly, refer to the Handling Precautions stated in the Operation Manual at SMC website (http://www.smcworld.com).

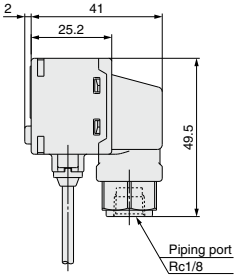

-C01L: Rc1/8

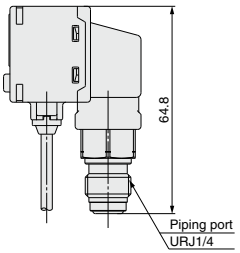

-A2L: URJ1/4

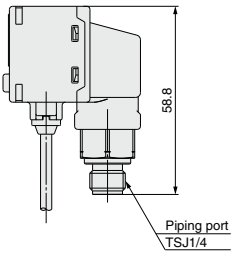

-B2L: TSJ1/4

Dimensions (For details about lead wires, refer to the product specifications.)

With bracket (Rear ported)

• 10-ZS-24-A

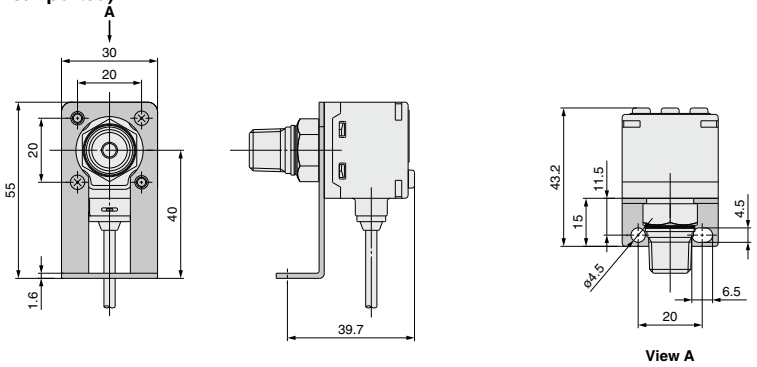

With bracket (Rear ported)

• 10-ZS-24-D

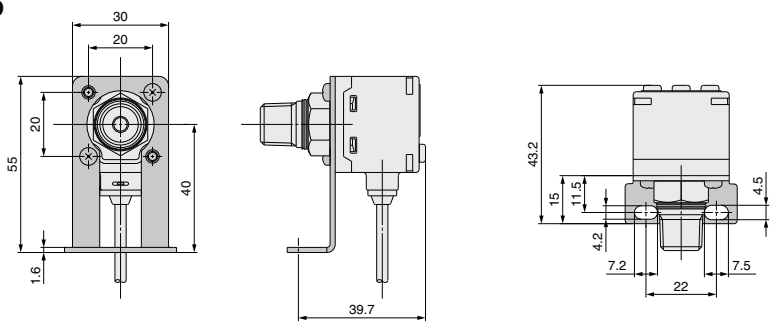

With bracket (Bottom ported)

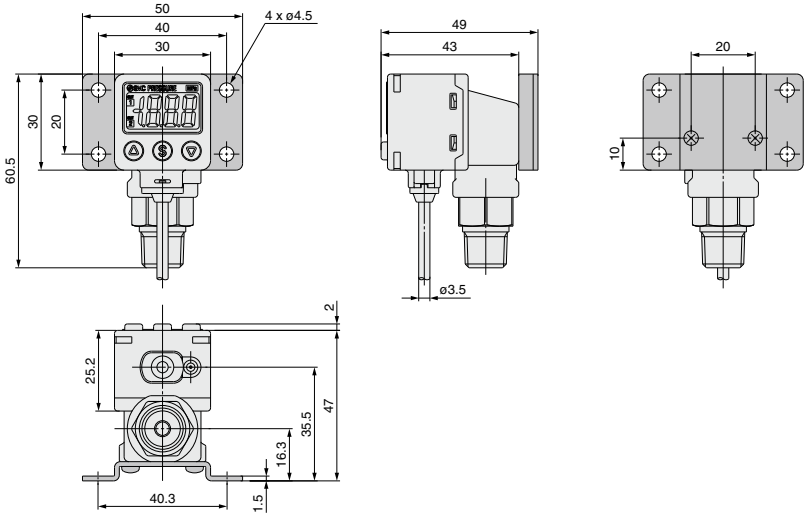

Dimensions (For details about lead wires, refer to the product specifications.)

Panel mount (Rear ported)

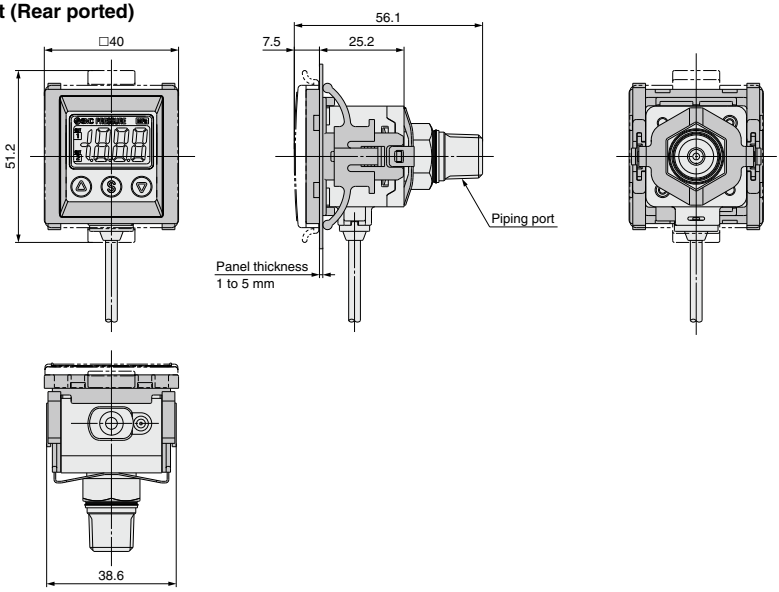

Panel-cut dimensions

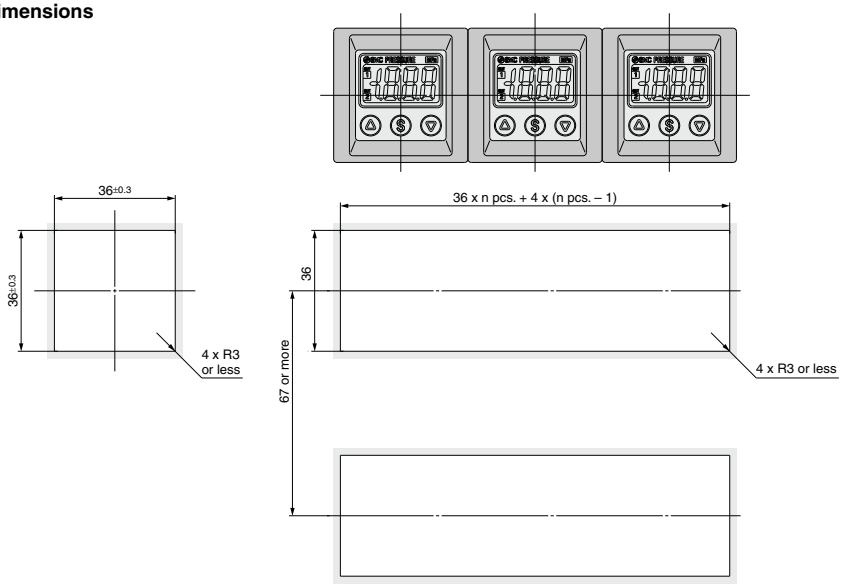

Dimensions (For details about lead wires, refer to the product specifications.)

Panel mount (Bottom ported)

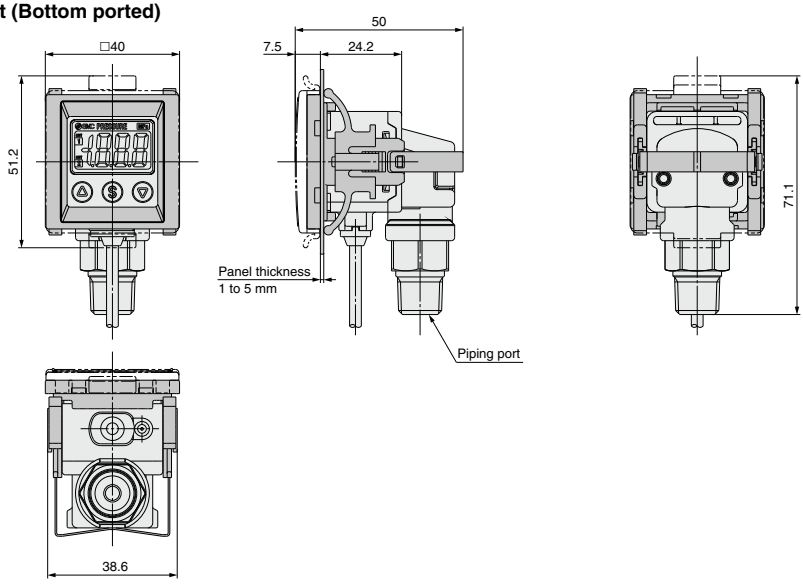

Panel-cut dimensions

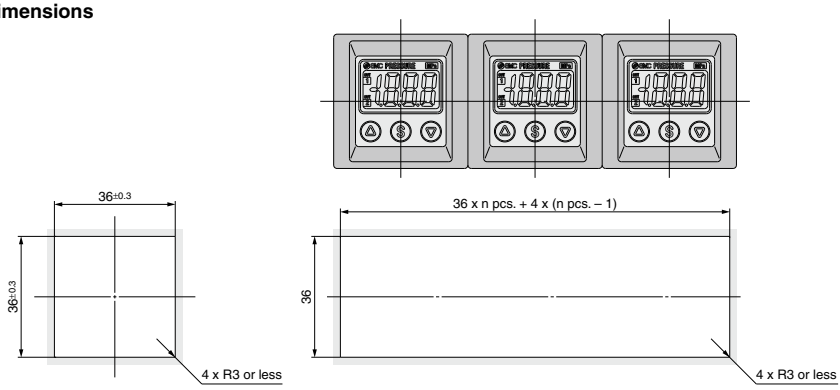

Function Details

F□ in brackets stand for the function codes. Refer to the operating manual for how to operate and function codes in detail.

A Auto-shift function (F4)

When there are large fluctuations in the supply pressure, the switch may fail to operate correctly. The auto-shift function compensates such supply pressure fluctuations. It measures the pressure at the time of auto-shift signal input and uses it as the reference pressure to correct the set-value on the switch.

Set-value correction by auto-shift function

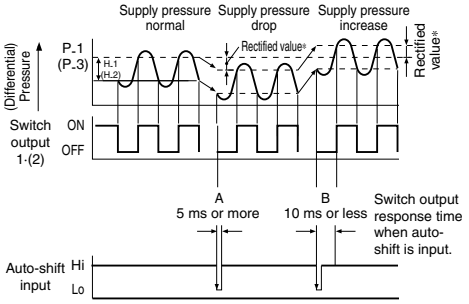

∗ Rectified value
When the auto-shift is selected, "ooo" will be displayed for approximately 1 second, and the pressure value at that point will be saved as a rectified value "C_5". Based on the saved rectified values, the set-value Note) of "P_1", "H_1", "P_2", and "H_2" will likewise be rectified.

Note) When an output is reversed, "n_1", "H_1", "n_2", "H_2" will be rectified.

Possible Set Range for Auto-Shift Input

	Regulating pressure range	Possible set range
Compound pressure	–110.0 to 110.0 kPa	–220 to 220 kPa
Vacuum pressure	10.0 to –111.0 kPa	121.0 to –121.0 kPa
Positive pressure	–0.105 to 1.100 MPa	–1.205 to 1.205 MPa
	–0.105 to 2.20 MPa	–2.31 to 2.31 MPa

Auto-shift zero
The basic function of auto-shift zero is the same as the function for auto-shift. Also, it corrects values on the display, based on a pressure value of 0, when the auto-shift is selected.

B Auto-preset function (F8)

Auto-preset function, when selected in the initial setting, calculates and stores the set-value from the measured pressure.
The optimum set-value is determined automatically by repeating vacuum and break with the target workpiece several times.

Suction Verification

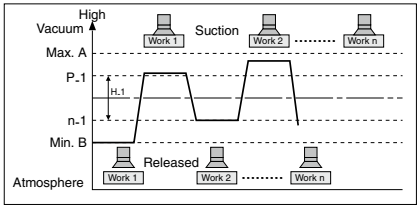

Formula for Obtaining the Set-Value

P_1 or P_2	H_1 or H_2
P_1 (P_2) = A – (A-B)/4 n_1 (n_2) = B + (A-B)/4	H_1 (H_2) = (A-B)/2

C Precision indicator setting function (F7)

Fine adjustment of the indicated value can be made within the range of ±5% of the read value. The scattering of the indicated value can be eliminated.

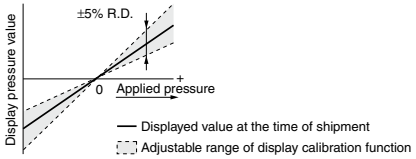

Note) When the precision indicator setting function is used, the set pressure value may change ±1 digit.

D Peak and bottom display function

This function constantly detects and updates the maximum (minimum) value and allows to hold the maximum (minimum) pressure value.
When the ⓐ ⓥ buttons are simultaneously pressed for 1 second or longer, while "holding", the hold value will be reset.

E Key lock function

This function prevents incorrect operations such as accidentally changing the set-value.

F Zero-out function

This function clears and resets the zero value on the display of measured pressure.
For the pressure switch with analog output, the analog output shifts according to the indication. A displayed value can be adjusted within ±10% F.S. of the pressure when ex-factory.

Function Details

G Error indication function

Error name	Error code	Description
Overcurrent error	Er 1	Load current of switch output (OUT1) exceeds 80 mA.
	Er2	Load current of switch output (OUT2) exceeds 80 mA.
Residual pressure error	Er3	It is still applied with pressure that is ±10% over the atmospheric pressure and the upper limit of the rated pressure range when it is cleared to zero. ∗ After displaying the error code for 1 second, the switch automatically returns to the measuring mode. Due to individual product differences, the setting range varies ±1 digits.
Applied pressure error	HHH	Supply pressure exceeds the maximum set pressure.
	LLL	Supply pressure is below the minimum set pressure.
Auto-shift error	or	The value measured at the time of auto-shift input is outside the set pressure range. ∗ After displaying the error code for one second, the switch returns to the measuring mode.
System error	Er0	Internal data error
	Er4	Internal data error
	Er7	Internal data error

H Anti-chattering function (F3)

A large bore cylinder or ejector consumes a large volume of air in operation and may experience a temporary drop in the supply pressure. This function prevents detection of such temporary drops in the supply pressure as an error.

Available response time settings
20 ms, 100 ms, 500 ms, 1000 ms, 2000 ms

<Principle>
This function averages pressure values measured during the response time set by the user and then compares the average pressure value with the pressure set point value to output the result on the switch.

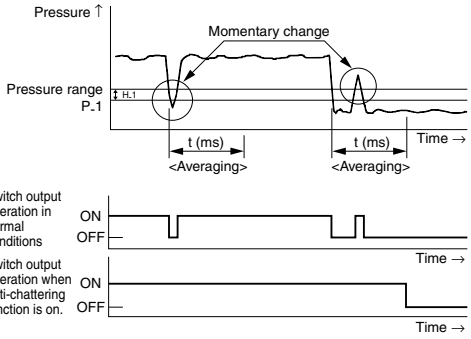

I Display unit switching function (F0)

Display units can be switched with this function.

Pressure range		For compound pressure	For vacuum pressure	For positive pressure	
Applicable pressure sensor		**10-ZSE80F**	**10-ZSE80**	**10-ISE80**	**10-ISE80H**∗
Set pressure range		–110 to 110 kPa	10 to –111 kPa	–0.1 to 1.1 MPa	–0.1 to 2.2 MPa
PR	kPa	0.1	0.1	1	1
	MPa	0.001	0.001	0.001	0.001
GF	kgf/cm²	0.001	0.001	0.01	0.01
bAr	bar	0.001	0.001	0.01	0.01
PSI	psi	0.02	0.02	0.1	1
inH	inHg	0.1	0.1	—	—
mmH	mmHg	1	1	—	—

∗ 10-ISE80H: Does not indicate the last digit when the pressure is 2.000 MPa or higher.

J Power-saving mode (F9)

The numerical value disappears and the decimal points blink.

Power-saving mode can be selected.
It shifts to the power-saving mode without button operation for 30 seconds. It is set to the normal mode (Power-saving mode is OFF.) when ex-factory. (Decimal points and operation indicator light (only when the switch output is turned ON.) blink in the power-saving mode.)

K Secret code setting (F10)

Input an arbitrary three-digit value.

∗ The set-value can be confirmed when the key is locked.

It can be set whether code number input is required or not when key is locked. It is set to input no code number when ex-factory.

Made to Order

Please contact SMC for detailed dimensions, specifications, and lead times.

Made to Order

Symbol

Lead wire length 3 m -X501

It has a lead wire extended to 3 meters.

How to Order

* Refer to How to Order on page 1340 for standard specifications.

10-ZSE80(F)/10-ISE80(H) – □ – □ – □ – X501

- Piping*
- Output*
- Option*